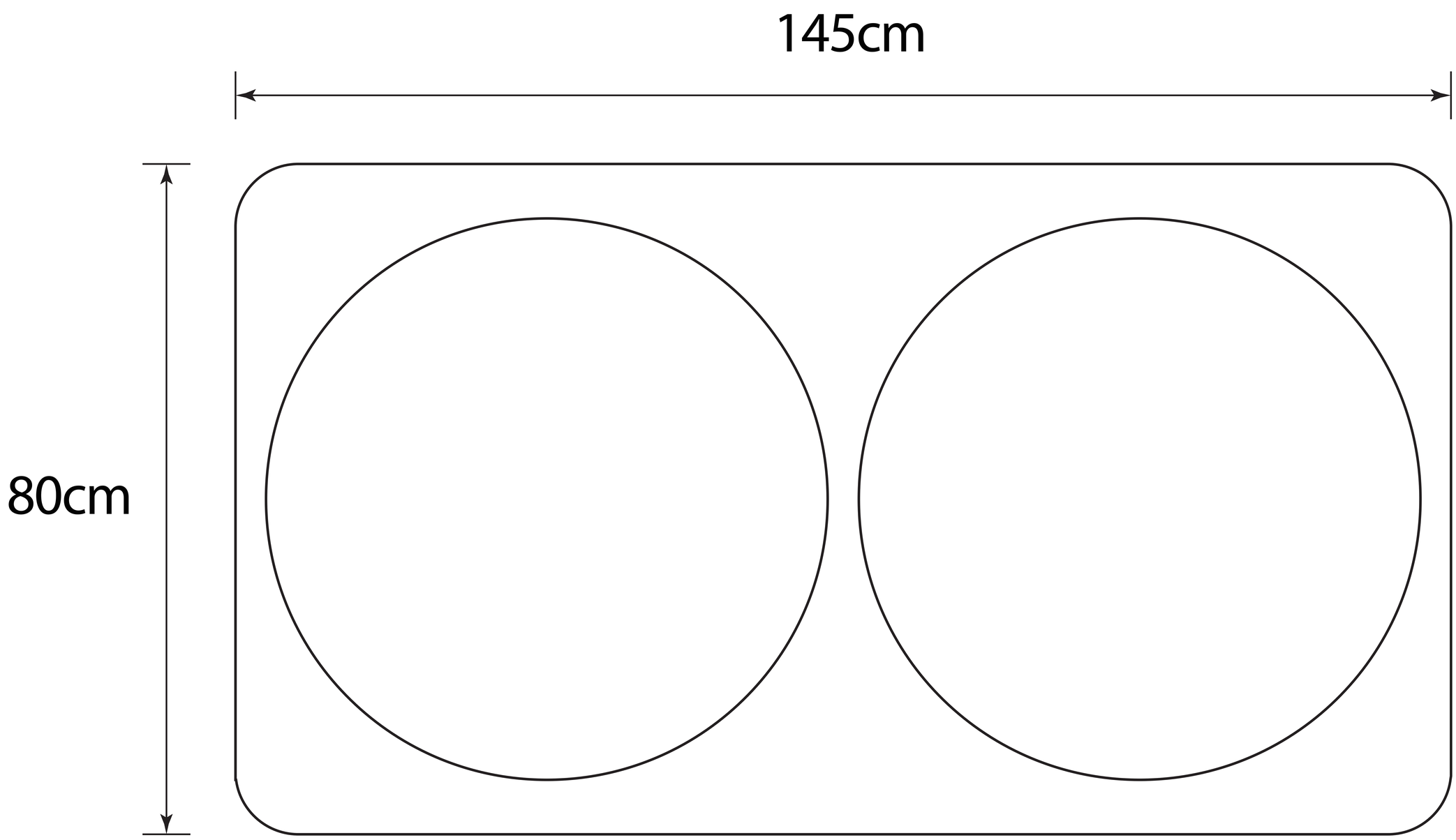
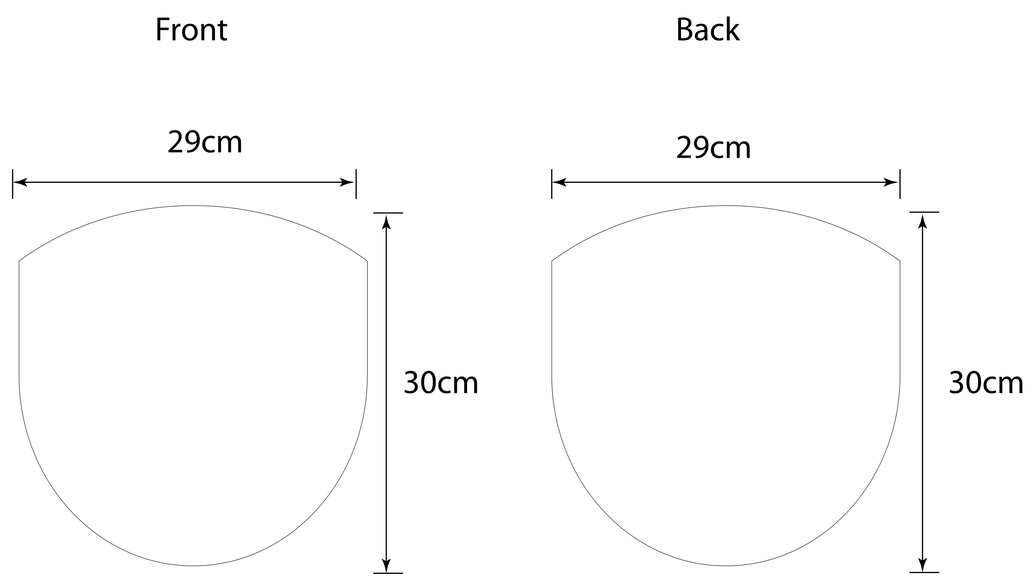
Carrying Pouch